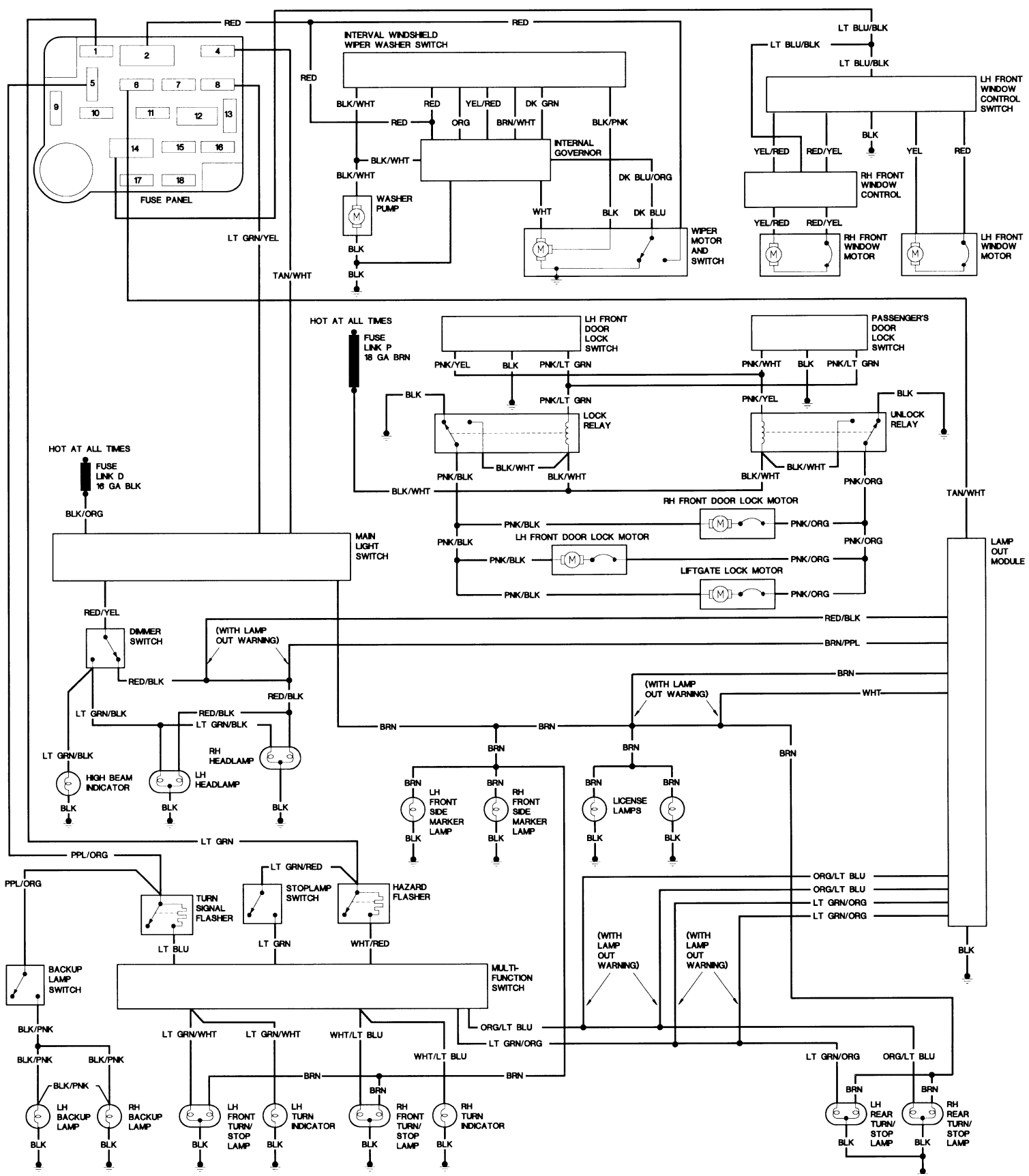
FUSE PANEL
INTERVAL WINDSHIELD WIPER WASHER SWITCH
INTERNAL GOVERNOR
WASHER PUMP
WIPER MOTOR AND SWITCH
LH FRONT WINDOW CONTROL SWITCH
RH FRONT WINDOW CONTROL
RH FRONT WINDOW MOTOR
LH FRONT WINDOW MOTOR
HOT AT ALL TIMES
FUSE LINK P 18 GA BRN
LH FRONT DOOR LOCK SWITCH
PASSENGER'S DOOR LOCK SWITCH
LOCK RELAY
UNLOCK RELAY
HOT AT ALL TIMES
FUSE LINK D 16 GA BLK
MAIN LIGHT SWITCH
RH FRONT DOOR LOCK MOTOR
LH FRONT DOOR LOCK MOTOR
LIFTGATE LOCK MOTOR
LAMP OUT MODULE
DIMMER SWITCH
(WITH LAMP OUT WARNING)
HIGH BEAM INDICATOR
LH HEADLAMP
RH HEADLAMP
LH FRONT SIDE MARKER LAMP
RH FRONT SIDE MARKER LAMP
LICENSE LAMPS
TURN SIGNAL FLASHER
STOPLAMP SWITCH
HAZARD FLASHER
BACKUP LAMP SWITCH
MULTI-FUNCTION SWITCH
LH BACKUP LAMP
RH BACKUP LAMP
LH FRONT TURN/ STOP LAMP
LH TURN INDICATOR
RH FRONT TURN/ STOP LAMP
RH TURN INDICATOR
LH REAR TURN/ STOP LAMP
RH REAR TURN/ STOP LAMP